WONDER | REAR TWIN BED

2025 MANUAL



LEISURE
TRAVEL VANS

⚠ WARNING

Operating, servicing and maintaining a passenger vehicle, pickup truck, van, or off-highway motor vehicle can expose you to chemicals including engine exhaust, carbon monoxide, phthalates, and lead, which are known to the State of California to cause cancer and birth defects or other reproductive harm. To minimize exposure, avoid breathing exhaust, do not idle the engine except as necessary, service your vehicle in a well-ventilated area and wear gloves or wash your hands frequently when servicing your vehicle.
For more information go to www.P65Warnings.ca.gov/passenger-vehicle

TABLE OF CONTENTS

1. INTRODUCTION
Supplemental Manual....1-1
Motorhome Information Kit....1-2
Options and Equipment....1-2
Service Assistance....1-2
Reporting Safety Defects....1-3

2. GENERAL INFORMATION
Floor Plan....2-1
Exterior Equipment Location....2-2
Beds and Seating....2-4

3. SCHEMATICS
Electrical....3-1
12 volt Electrical Reference....3-1
120 Volt Electrical Reference....3-2
Electrical Schematic....3-3
Plumbing....3-8
Water lines schematic....3-8
Drain line schematic....3-9
Entertainment....3-10
Satellite Pre-wire....3-11

1. INTRODUCTION

Congratulations! Thank you for selecting a Leisure Travel Vans Motorhome.

Welcome to the exciting world of motorhome travel and camping, with all the comforts of home with you, while you travel and enjoy the outdoors.

Your motorhome has been designed and manufactured to enhance your travel and camping experience and to provide you with safe, efficient and trouble-free operation.

Before your first drive, become familiar with the operation of the vehicle chassis and all functions and operations of the motorhome. Spend adequate time with your dealer when you take delivery to learn all you can about your new motorhome.

KEEP the Motorhome Information Kit within your motorhome for readily available reference.

PASS this manual, the Chassis Operation Manual and the Motorhome Information Kit to any subsequent operator or owner.

For clarification or further details on any of the enclosed information, please contact:

Your Leisure Travel Vans Dealer or Triple E RV Customer Service at:

Email:	info@tripleerv.com
Toll Free:	877-992-9906
Telephone:	204-325-4361
Fax:	204-325-5241

SUPPLEMENTAL MANUAL

This manual was prepared to aid the operator and occupants in the operation and care of the motorhome by giving specific information about your model. There are many options to Leisure Travel Vans, so ensure that you are familiar with your motorhome's systems and equipment. All operators and occupants of the motorhome should read, understand and follow the instructions in this manual, the vehicle chassis manual & the information contained in the Motorhome Information Kit provided with your new motorhome.

Your motorhome contains a number of systems, components, equipment, and appliances manufactured by vendors that supply components for Triple E RV. These vendors are unrelated to Triple E RV.

Before operating the motorhome for the first time – even if an experienced motorhome operator – read and become familiar with all of the relevant manuals to your motorhome, components, equipment and appliances provided in the Motorhome Information Kit. Your familiarity with the detailed operation of your motorhome will assist in your safe, efficient and trouble-free motorhome operation.

MOTORHOME INFORMATION KIT

The Motorhome Information Kit includes but isn't limited to information on the components, equipment and appliances listed below (based on options selected).

- Refrigerator
- Stove top
- Furnace
- Electrical Panel
- Toilet
- Water Heater
- Water Pump
- Water Filtration
- Vent (roof)
- Fire Extinguisher
- Smoke Detector
- Thermostat
- CO Detector
- Propane Detector
- Gas Regulator
- TV Antenna
- TV/DVD
- Chassis
- Air Conditioner
- Generator
- Stabilizers/Leveling Jacks
- Rear View Monitor
- Inverter
- Entertainment System
- Safety
- Flooring and Countertops
- Electric Step
- Solar Panel
- Surge Protector
- Safe
- Awning

OPTIONS AND EQUIPMENT

Leisure Travel Vans are available in various sizes and floor plan configurations and with differing optional equipment. The equipment, accessories and components described in this manual may not apply in all respects to your motorhome. Read the material and manuals provided in the Motorhome Information Kit for detailed instructions regarding the equipment specific to your motorhome.

SERVICE ASSISTANCE

Your dealer will assist you with any additional information you need and will answer any questions you have about the operation of your motorhome. When it's time to service the vehicle, remember that your dealer knows your motorhome best and is dedicated to your satisfaction. Your dealer will provide quality maintenance and assistance during your period ownership. Triple E RV strongly recommends that you follow a regular maintenance schedule to keep your motorhome functioning at its best.

Call the following numbers if you require warranty assistance while traveling:

Triple E RV: 1-877-992-9906

Canada Sprinter Customer Service:
1-800-387-0100 www.thesprinter.ca

US Sprinter Customer Service:
1-877-762-8267 www.mbsprinterusa.com

Canada Ford Customer Service:
1-800-565-3673 www.ford.ca

US Ford Customer Service:
1-800-392-3673 www.ford.com

Emergency Roadside Service* Call:
1-877-219-3831
4287 Beltline Road, Box 198
Addison, Texas 75001

*This Emergency Roadside Service is available to owner of the motorhome during the first two years after purchase.

REPORTING SAFETY DEFECTS

If you suspect your motorhome has a safety defect that could cause injury or death, immediately contact Triple E RV. Also, contact the National Highway Traffic Safety Administration (NHTSA) in the US or Transport Canada to report your concern.

NHTSA will investigate the concern if there are a number of similar complaints. NHTSA has the authority to order a recall and repair campaign depending on the nature and severity of the problem.

You can reach the NHTSA by calling the Auto Safety Hot-line at 1-800-424-9393 (202-366-0123 in the Washington, DC, area) or by writing to NHTSA, US Department of Transportation, Washington, DC 20590. The hot-line also will provide you with additional information on motor vehicle safety.

In Canada, call 1-800-333-0510 or write to Transport Canada and Road Safety, 2780 Sheffield Road, Ottawa, Ontario K1B 3V9.

2. GENERAL INFORMATION

FLOOR PLAN

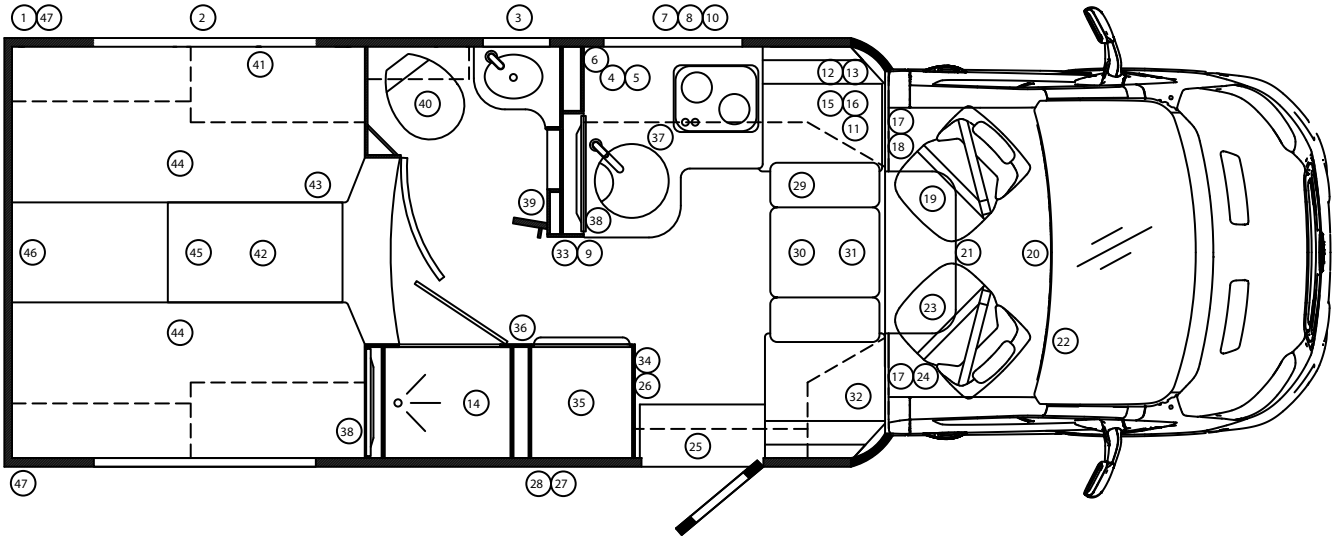

① Coach Batteries In Compartment Under Bed (Solar panel 30A fuse behind batteries)
② Egress Window
③ Shore Power Plug
④ Water Heater and Furnace Under Galley
⑤ Water Pump Under Galley
⑥ Tank Flush Non Return Valve Behind Access Cover in Overhead Cabinet
⑦ Utility Center Under Floor
⑧ Macerator Option Under Floor
⑨ Pantry
⑩ Sewer Hose Under Floor
⑪ Ignition 7.5A Fuse under seat
⑫ Satellite Option Prewire and Component Connection Plate in Overhead Cabinet
⑬ TV Antenna Booster/WIFI Switch behind panel
⑭ Shower
⑮ Step Switch, battery heat, G12 RTC shared 5A fuse under seat
⑯ Surge Protector/Transfer Switch Under Dinette Seat
⑰ USB Plug on Cab Upright
⑱ Battery 7.5A Fuse Behind Captains Seat
⑲ Chassis Batteries Under Captain Seat
⑳ Ford 12 Volt Plug and USB Plug
㉑ Swivel Seats
㉒ Optional Rear Door Lock/Unlock relay behind glove box
㉓ DC/DC Charger under seat
㉔ Awning Switch on pillar behind passenger
㉕ Water Heater Dial above Entrance Door
㉖ Battery Disconnect Switch on Cabinet Wall
㉗ Generator Option Under Floor
㉘ Exterior BBQ Connection Under Floor
㉙ Breaker Panel
㉚ Dinette
㉛ Smoke Alarm on Ceiling
㉜ MultiPlex Display on Cab Upright
㉝ Thermostat Sensor
㉞ Fire Extinguisher
㉟ Fridge Below and Microwave Above
㊱ Propane/Carbon Monoxide Detector on Cabinet Face
㊲ Galley
㊳ TV
㊴ MultiPlex G12 Panel Board behind Access cover
㊵ Toilet
㊶ Inverter Under Bed
㊷ Water Tank Under Step
㊸ Water Tank Drain Under Bed
㊹ Bed (Wardrobe Under)
㊺ Propane Tank Under Floor
㊻ USB Plug on O/H Cabinet
㊼ Exterior Storage

EXTERIOR EQUIPMENT LOCATION

PASSENGER SIDE VIEW

1. Light
2. External Receptacle
3. Generator Compartment
4. BBQ Hook-Up
5. Storage Compartment
6. Electrical Step
7. Awning
8. Ladder (Optional)

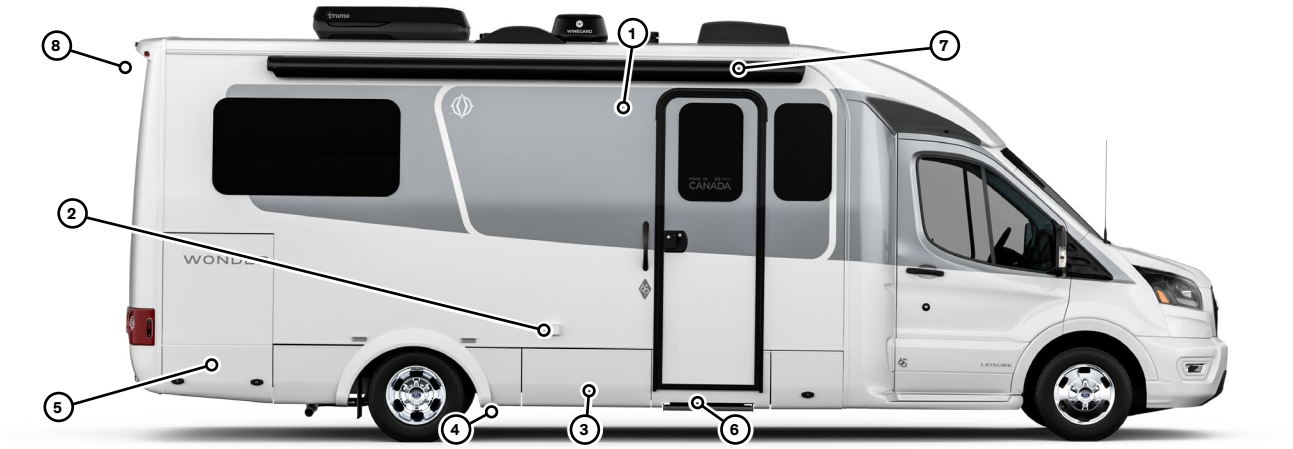

DRIVER SIDE VIEW

1. Sewer Termination
2. Fuel Fill
3. Sewer Hose (Behind Doors)
4. Shore Power Connection
5. Utility Center
6. Storage Compartment
7. Propane Shut-Off
8. Water Heater
9. Furnace Vent
10. Battery/Inverter Compartment

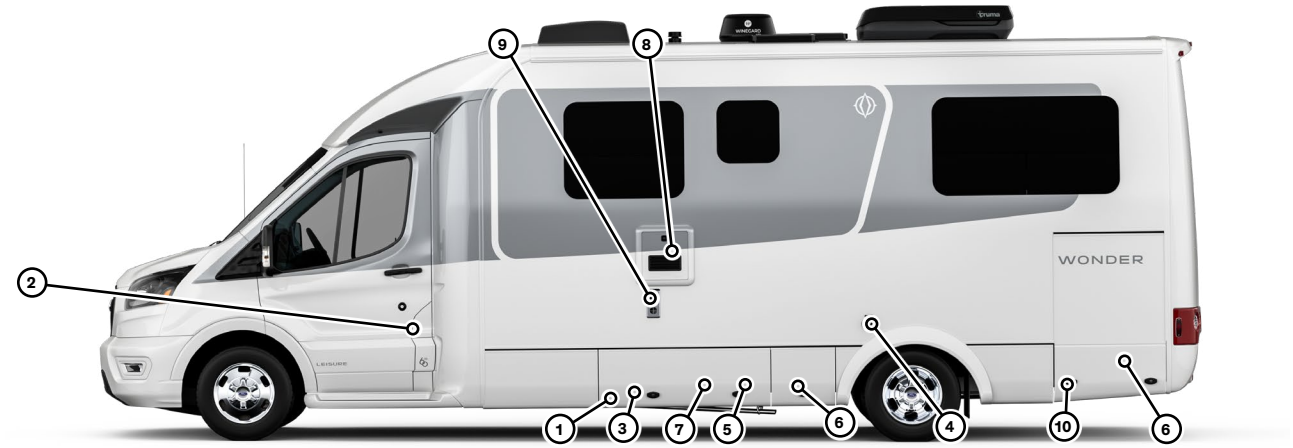

TOP VIEW

1. Skylight
2. Stack Vent
3. Roof Vent
4. Satellite (Optional)
5. Solar Panels (Optional)
6. A/C
7. Radio Antenna
8. TV/WiFi Antenna

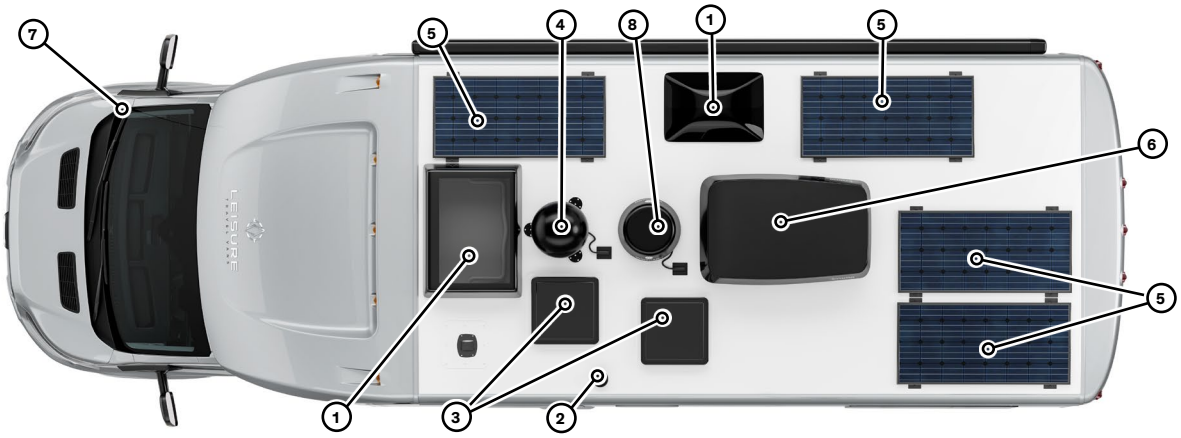

BEDS AND SEATING

COMBINING THE TWIN BEDS

1. Flip out the bed extension ① located between the beds.

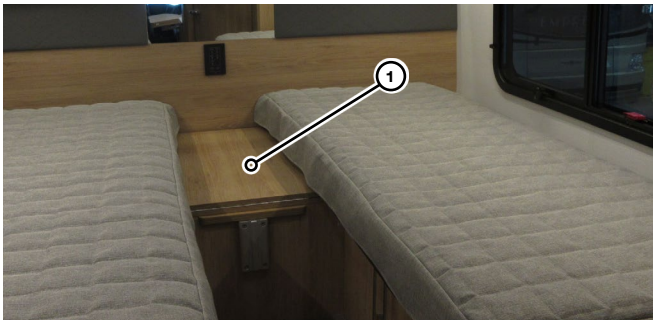

2. Slide the mattresses ② together to meet in the center.

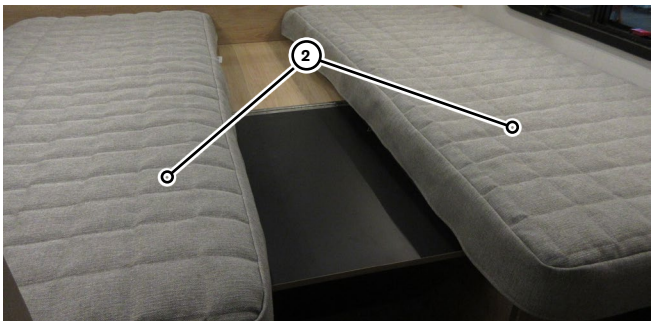



TO RETURN THE TWIN BEDS TO THEIR ORIGINAL POSITION:

1. Slide the mattresses back out towards the walls of the motorhome.
2. Fold the bed extension back in.

ATTACHING THE TABLE

1. Remove table ③ and support ④ from storage location at the foot of the driver side twin bed.

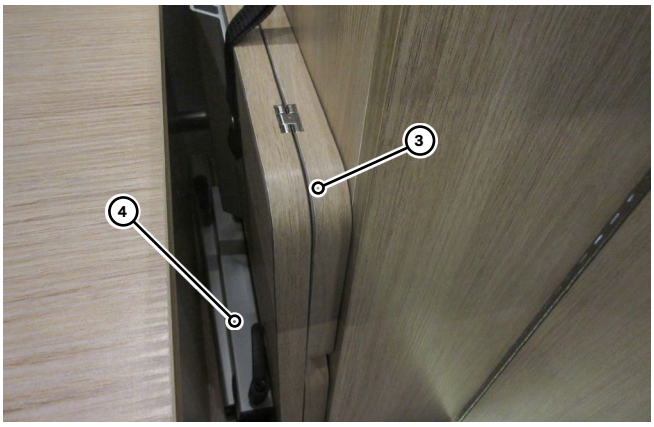

2. Engage the table leg into the floor plate.
3. Loosen handles on support to allow movement.
4. Slide bottom of table support in to groove on leg bracket and tighten handle to secure support in place ⑤.



5. Place post on bottom of table in to the opening at the top of the support.
6. Adjust the position and rotation of the table to your liking, and tighten handles and to secure in place ⑥.



REMOVING THE TABLE

Follow steps 1 through 6 above in reverse order to remove and store the table.

3. SCHEMATICS

ELECTRICAL

12 VOLT ELECTRICAL REFERENCE

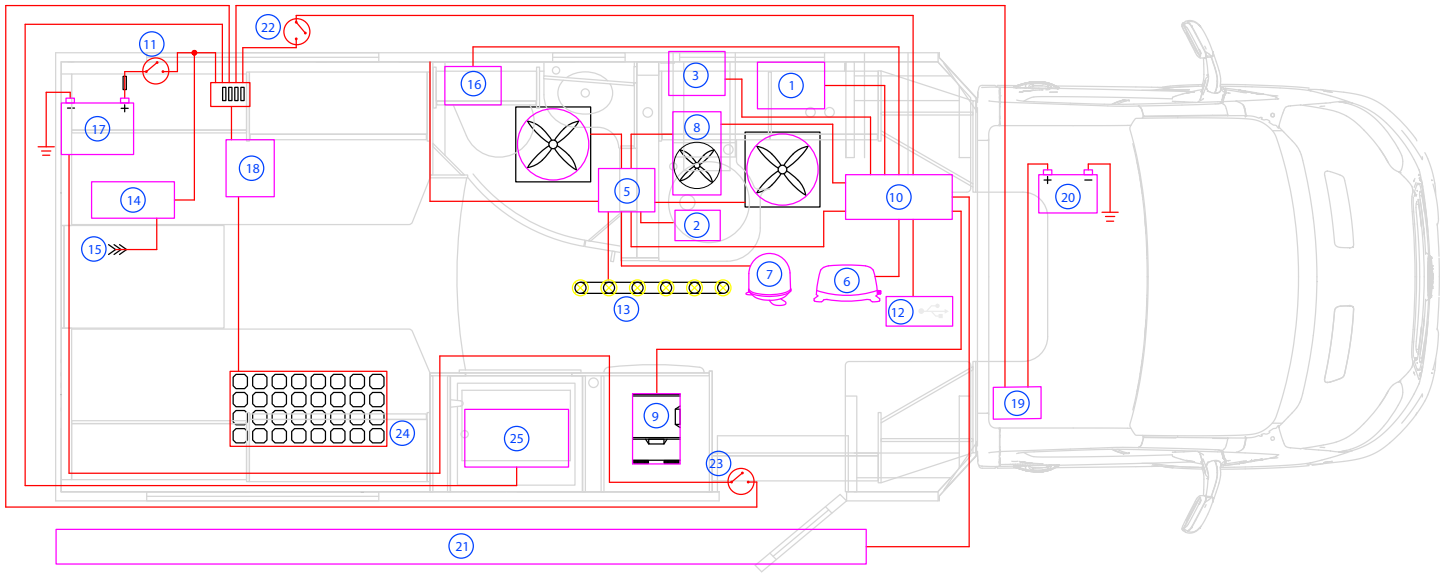

W24RTB 12V ELECTRICAL WIRING SCHEMATIC

PLEASE REFER TO BREAKER PANEL LABELS FOR EXACT LAYOUT

① Macerator Pump (Optional)
② Water Pump
③ Water Heater
④ Power Roof Vent (Washroom/Galley)
⑤ Multiplex System
⑥ Winegard Connect 2.0
⑦ Satellite Dish (Optional)
⑧ Furnace
⑨ Fridge
⑩ DC Fuse Panel
⑪ Battery Storage Switch
⑫ USB Chargers
⑬ Light Circuits
⑭ Inverter
⑮ 120V AC Power Input
⑯ Macerator Toilet
⑰ RV Batteries
⑱ Solar Charge Controller
⑲ DC/DC Charger
⑳ Chassis Battery
㉑ Awning
㉒ Battery Disconnect
㉓ Lithium Battery Heat Enable Switch
㉔ Solar Panels (200W or 400W Optional)
㉕ Generator (Optional)

120 VOLT ELECTRICAL REFERENCE

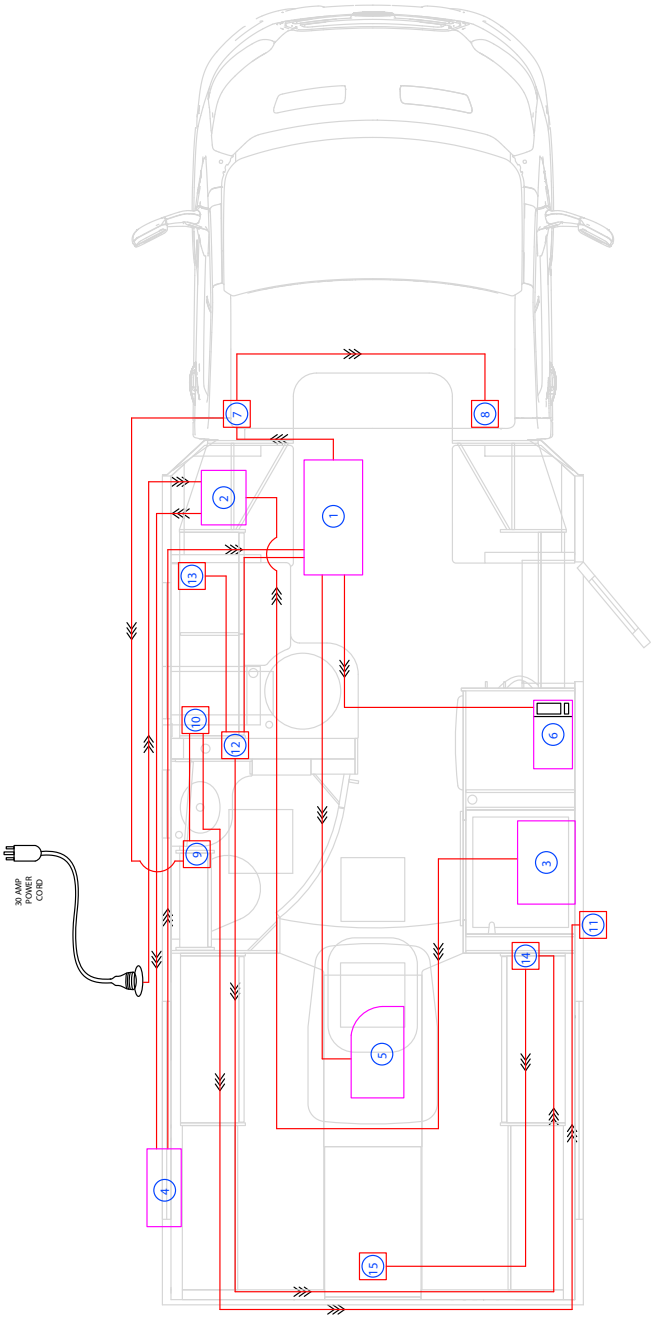

W24RTB 30 AMP 120V ELECTRICAL WIRING SCHEMATIC

PLEASE REFER TO BREAKER PANEL LABELS FOR EXACT LAYOUT

① AC Distribution Panel
② Transfer Switch/Surge Protector
③ Generator
④ Inverter/Charger
⑤ Air Conditioner
⑥ Microwave
⑦ Dinette Driver Side Receptacle
⑧ Dinette Pass. Side Receptacle
⑨ Washroom Receptacle
⑩ Galley Receptacle
⑪ Exterior Receptacle
⑫ Front TV
⑬ Entertainment Receptacles
⑭ Bedroom TV
⑮ Bedroom Receptacle

ELECTRICAL SCHEMATIC

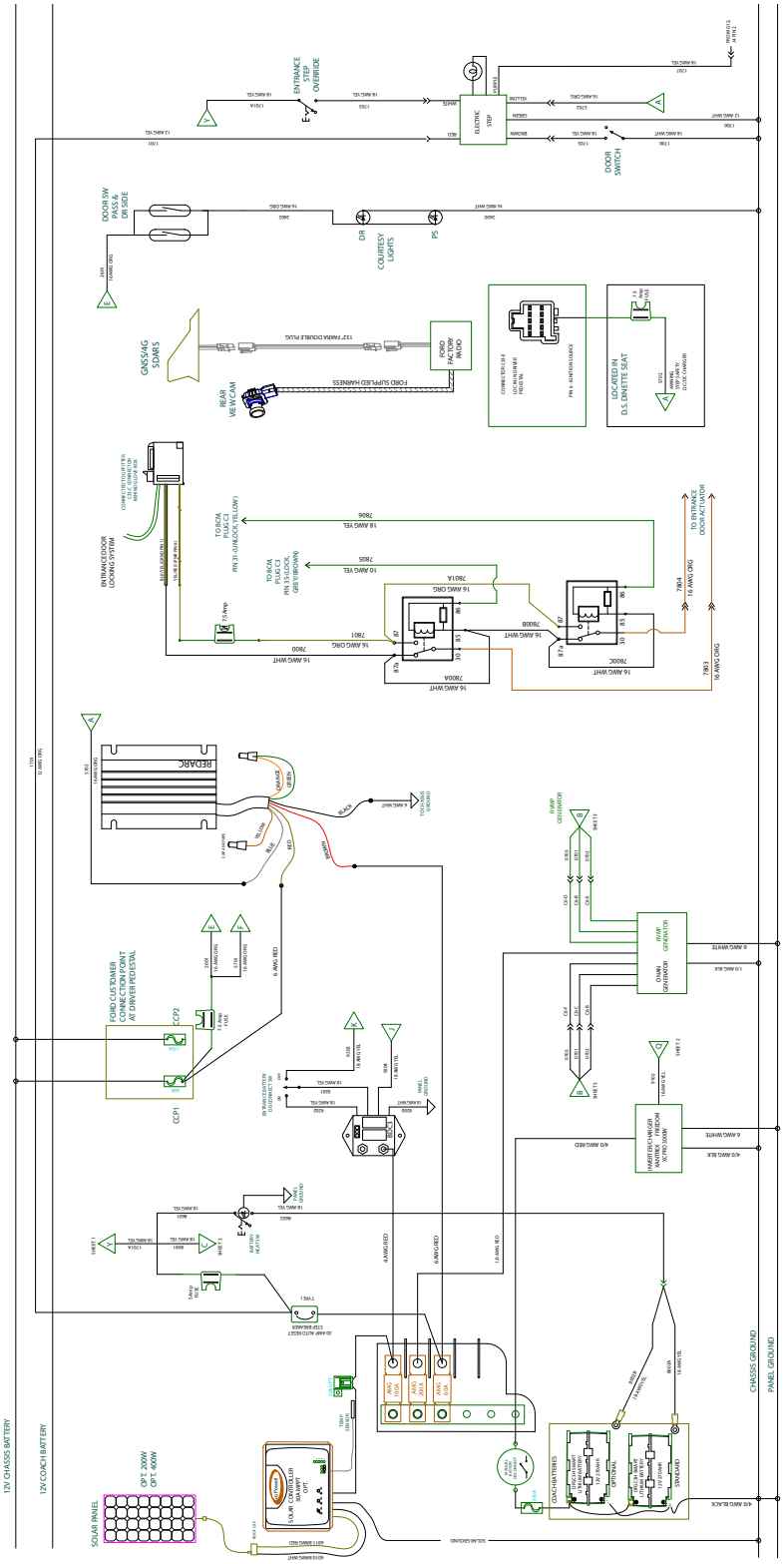

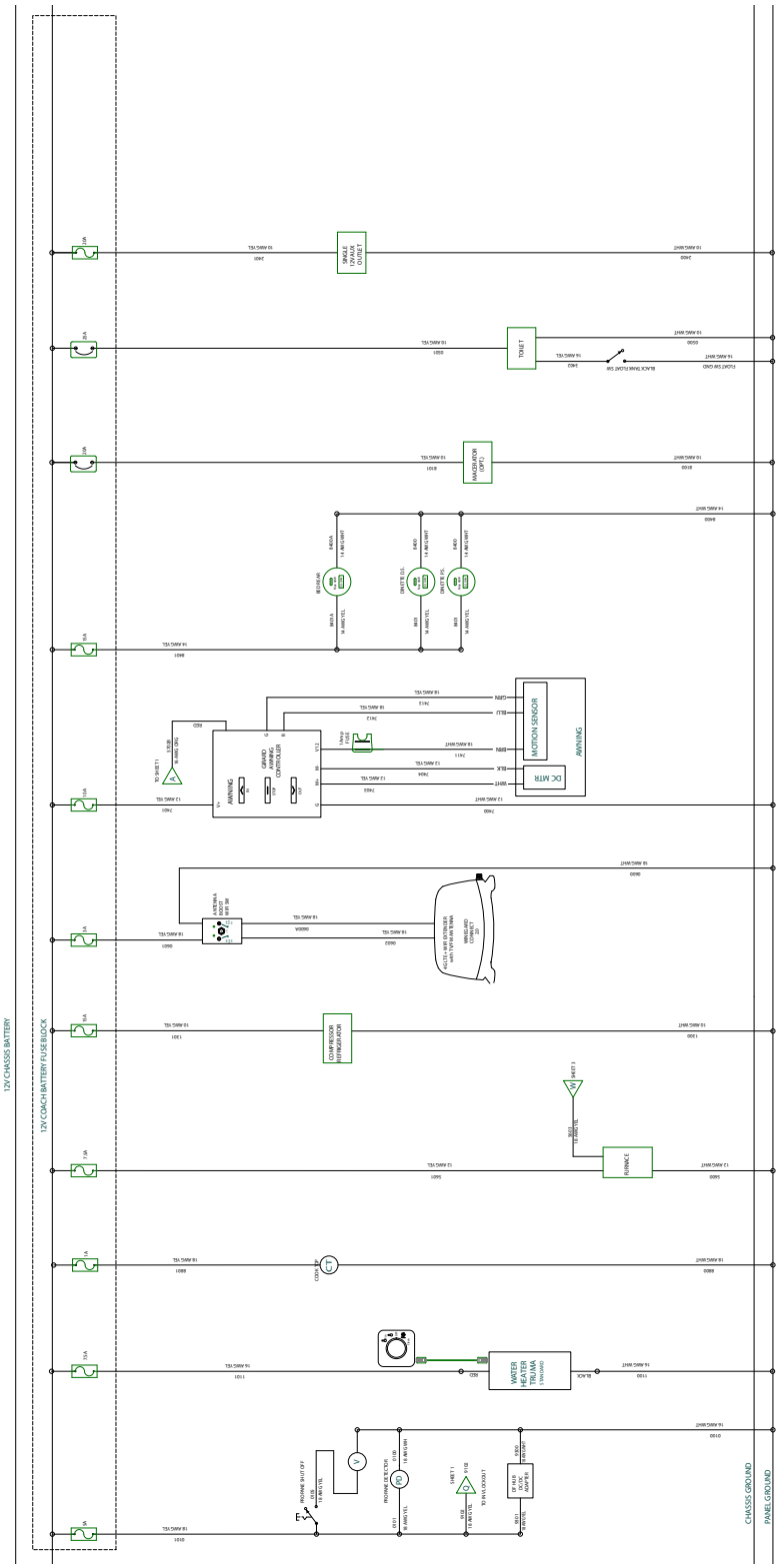
12V CHASSIS BATTERY
12V COACH BATTERY FUSE BLOCK
SINGLE 12V AUX OUTLET
TOILET
MACERATOR (OPT)
MOTION SENSOR
AWNING
DC MTR
COMPRESSOR REFRIGERATOR
FURNACE
WATER HEATER TRUMA
CHASSIS GROUND
PANEL GROUND

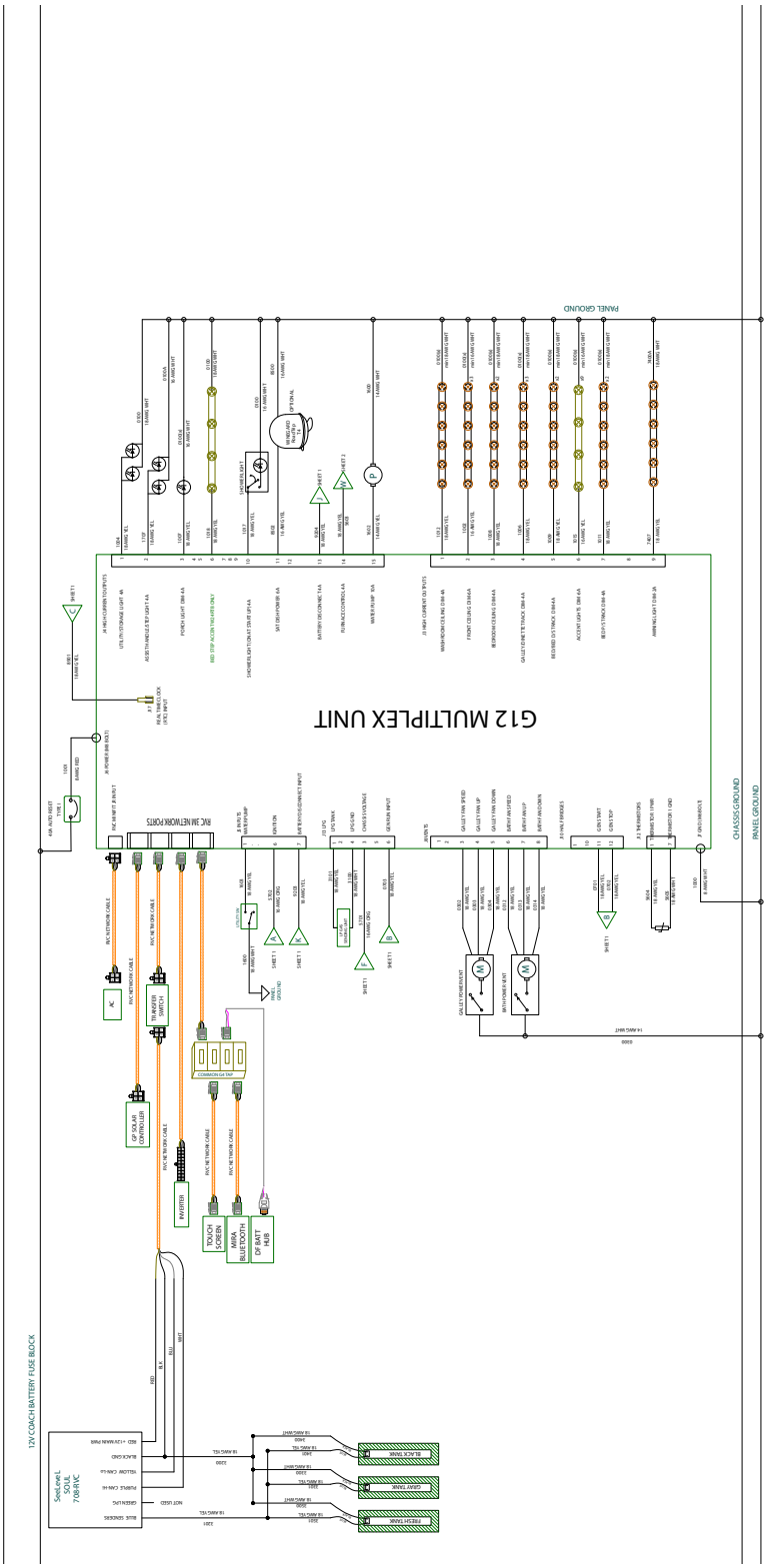
G12 MULTIPLEX UNIT
PANEL GROUND
CHASSIS GROUND
12V CHASSIS BATTERY
12V COACH BATTERY FUSE BLOCK
RVC NETWORK CABLE
TOUCH SCREEN
MMA BLUETOOTH
DP BATT HUB
GP SOLAR CONTROLLER

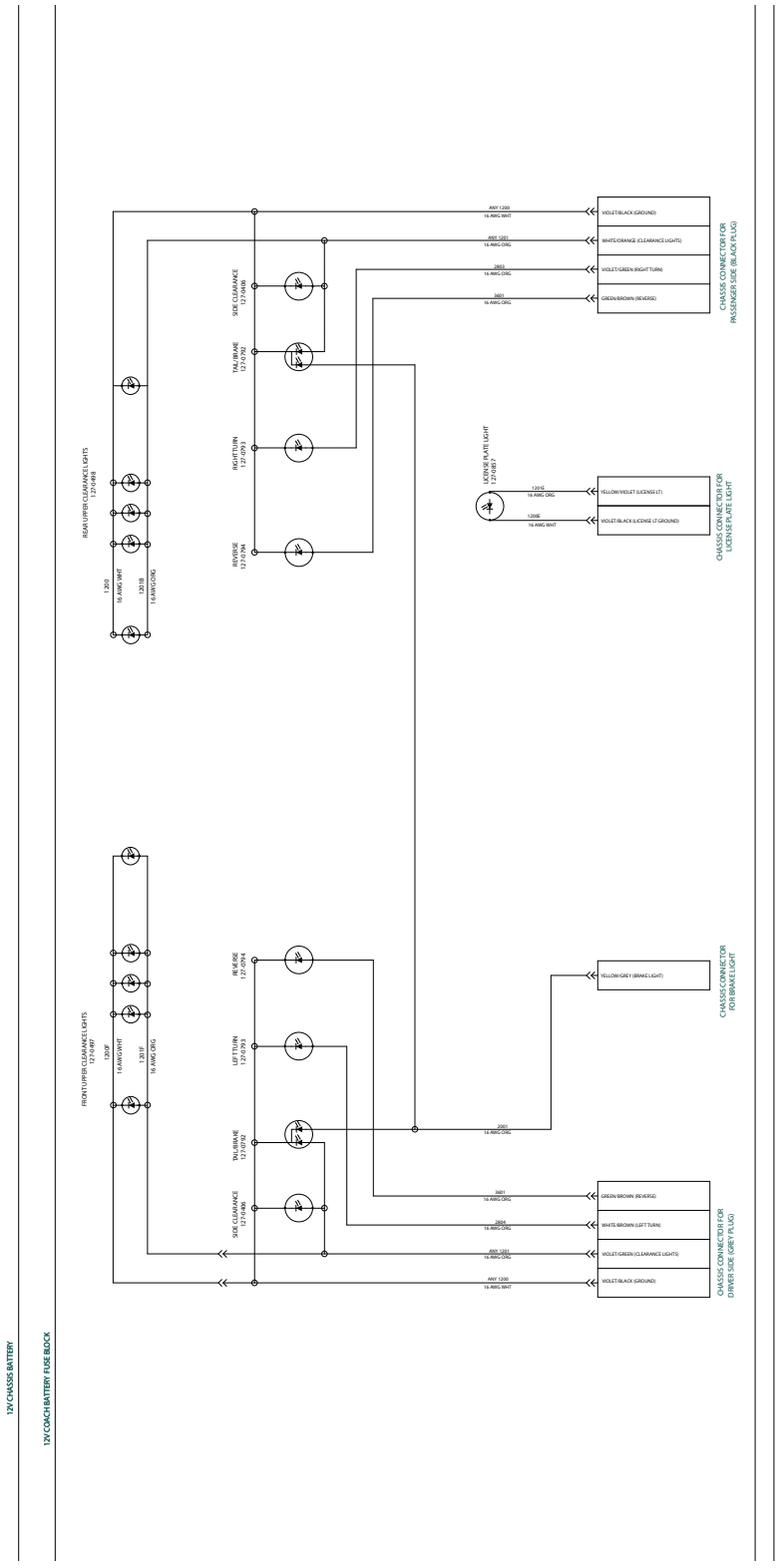
12V CHASSIS BATTERY
12V COACH BATTERY FUSE BLOCK
REAR UPPER CLEARANCE LIGHTS
FRONT UPPER CLEARANCE LIGHTS
SIDE CLEARANCE
TAIL/BRAKE
RIGHT TURN
REVERSE
LEFT TURN
LICENSE PLATE LIGHT
CHASSIS CONNECTOR FOR PASSENGER SIDE (BLACK PLUG)
CHASSIS CONNECTOR FOR LICENSE PLATE LIGHT
CHASSIS CONNECTOR FOR BRAKE LIGHT
CHASSIS CONNECTOR FOR DRIVERS SIDE (GREY PLUG)
VIOLET/BLACK (GROUND)
WHITE/ORANGE (CLEARANCE LIGHTS)
VIOLET/GREEN (RIGHT TURN)
GREEN/BROWN (REVERSE)
YELLOW/VIOLET (LICENSE LT)
VIOLET/BLACK (LICENSE LT GROUND)
YELLOW/GREY (BRAKE LIGHT)
GREEN/BROWN (REVERSE)
WHITE/BROWN (LEFT TURN)
VIOLET/GREEN (CLEARANCE LIGHTS)
VIOLET/BLACK (GROUND)

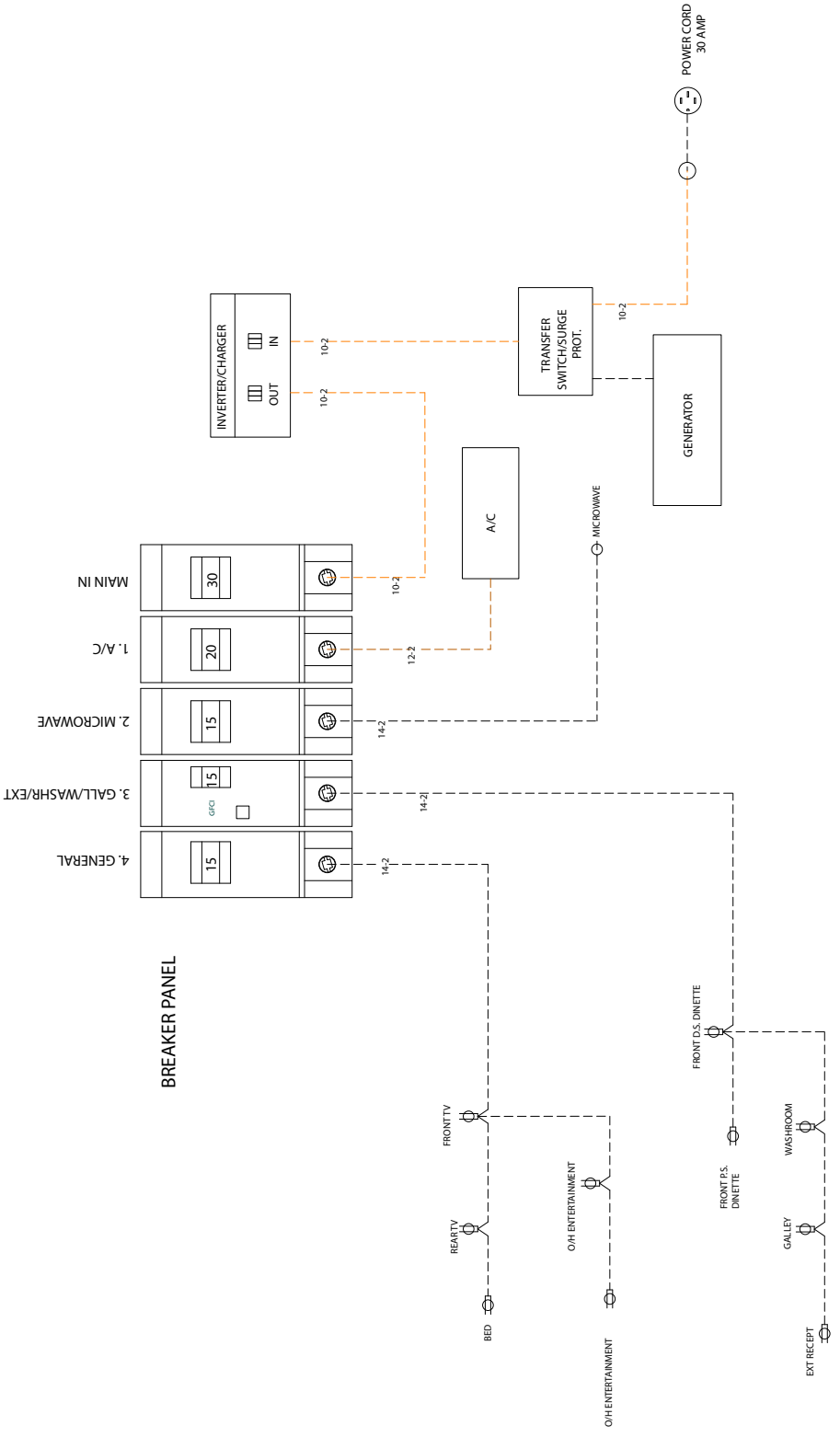
POWER CORD
30 AMP
TRANSFER
SWITCH/SURGE
PROT.
10-2
GENERATOR
INVERTER/CHARGER
IN
OUT
10-2
10-2
A/C
MICROWAVE
MAIN IN
30
10-2
1. A/C
20
12-2
2. MICROWAVE
15
14-2
3. GALL/WASHR/EXT
15
GFCI
14-2
4. GENERAL
15
14-2
BREAKER PANEL
FRONT TV
REAR TV
BED
O/H ENTERTAINMENT
O/H ENTERTAINMENT
FRONT D.S. DINETTE
FRONT P.S.
DINETTE
WASHROOM
GALLEY
EXT RECEPT

PLUMBING

WATER LINES SCHEMATIC

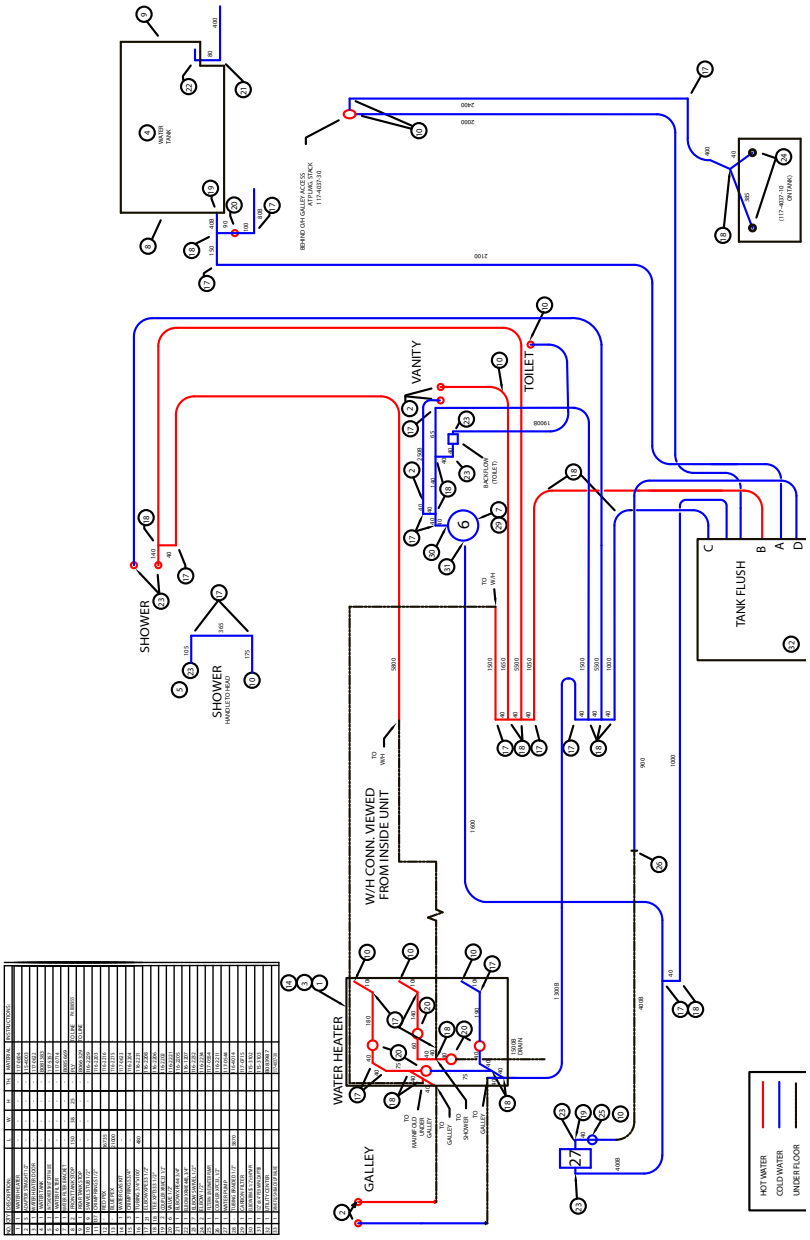

DRAIN LINE SCHEMATIC

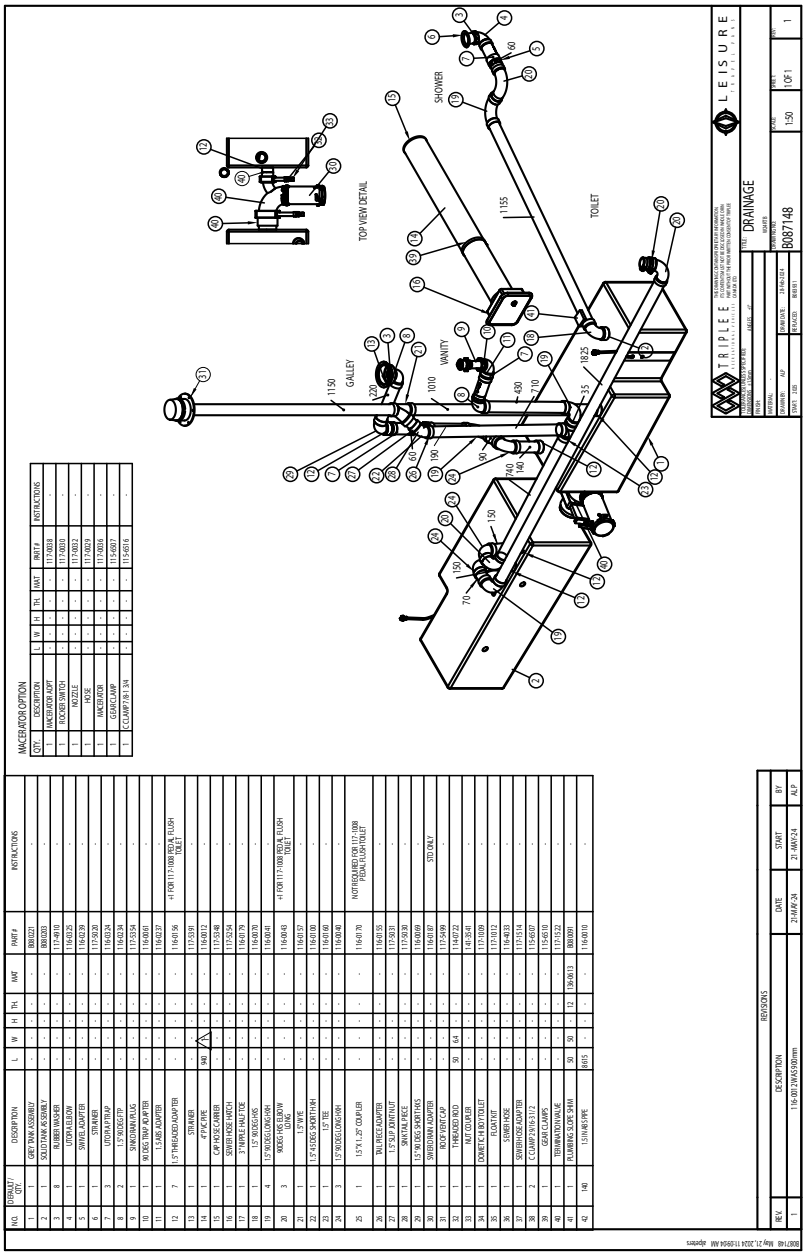

ITEM	QTY	DESCRIPTION	L	W	H	TH.	PART #	INSTRUCTIONS
1	1	GREY TANK ASSEMBLY	-	-	-	-	B081021	-
2	1	SOLID TANK ASSEMBLY	-	-	-	-	B081083	-
3	8	RUBBER WASHER	-	-	-	-	117-4010	-
4	1	DIVERTER VALVE	-	-	-	-	116-0425	-
5	1	38MM ADAPTER	-	-	-	-	116-0439	-
6	1	38MM ELBOW	-	-	-	-	116-0434	-
7	3	UTILITY PUMP	-	-	-	-	116-0134	-
8	2	1.5" NOZZLE/TIP	-	-	-	-	116-0234	-
9	1	SHADOW MANIFOLD	-	-	-	-	117-5354	-
10	1	90 DEG TRAP ADAPTER	-	-	-	-	116-0061	-
11	1	1.5 ABS ADAPTER	-	-	-	-	116-0237	-
12	7	1.5" THREADED ADAPTER	-	-	-	-	116-0156	+1 FOR 117-1088 PEDAL FLUSH TOILET
13	1	STRAINER	-	-	-	-	117-5101	-
14	1	4" PVC PIPE	MM	-	-	-	116-0312	-
15	1	CAP HOSE CARRIER	-	-	-	-	117-5348	-
16	1	SEWER HOSE HATCH	-	-	-	-	117-5254	-
17	1	3" NATURE HAUTOE	-	-	-	-	116-0179	-
18	1	1.5" 90 DEG HOSE	-	-	-	-	116-0070	-
19	4	1.5" 90 DEG LONG ELBOW	-	-	-	-	116-0041	-
20	3	90 DEG HOSE ELBOW	-	-	-	-	116-0043	+1 FOR 117-1088 PEDAL FLUSH TOILET
21	1	1.5" WYE	-	-	-	-	116-0157	-
22	1	1.5" 45 DEG SHORT TY-WY	-	-	-	-	116-0100	-
23	1	1.5" TEE	-	-	-	-	116-0160	-
24	3	1.5" 90 DEG LONG ELBOW	-	-	-	-	116-0040	-
25	1	1.5" x 1.25" COUPLER	-	-	-	-	116-0170	NOT REQUIRED FOR 117-1088 PEDAL FLUSH TOILET
26	1	BALANCE ADAPTER	-	-	-	-	116-0155	-
27	1	1.5" SLIP JOINT NUT	-	-	-	-	117-5031	-
28	1	SWITCH PLATE	-	-	-	-	117-5430	-
29	1	1.5" SLIP JOINT WASHER	-	-	-	-	116-0149	-
30	1	SHADOW MANIFOLD ADAPTER	-	-	-	-	116-0157	STD ONLY
31	1	BEIGE VENT CAP	-	-	-	-	117-5496	-
32	1	THREADED ROD	50	64	-	-	114-0722	-
33	1	NUT COUPLER	-	-	-	-	141-3541	-
34	1	COMBI C.H. BOY TOILET	-	-	-	-	117-1109	-
35	1	FLOAT KIT	-	-	-	-	117-1012	-
36	1	SEWER HOSE	-	-	-	-	116-4433	-
37	1	SEWER HOSE ADAPTER	-	-	-	-	117-1514	-
38	2	C CLAMP 20 to 32	-	-	-	-	115-6107	-
39	1	GEAR CLAMPS	-	-	-	-	115-6210	-
40	1	RUBBER GASKET 4"	-	-	-	-	117-1422	-
41	1	REMARKS: CLOSE TO SAMI	50	30	-	12	B081013	-
42	140	1.5 ABS PIPE	6000	-	-	-	116-0010	-

MACERATOR OPTION

QTY.	DESCRIPTION	L	W	H	TH.	PART #	INSTRUCTIONS
1	MACERATOR ADPT	-	-	-	-	117-5018	-
1	ROCKER SWITCH	-	-	-	-	117-5013	-
1	NOZZLE	-	-	-	-	117-5012	-
1	HOSE	-	-	-	-	117-5029	-
1	MACERATOR	-	-	-	-	117-5015	-
1	GEAR CLAMP	-	-	-	-	115-6007	-
1	C CLAMP 78 t 94	-	-	-	-	115-6014	-

REVISIONS			
REV.	DESCRIPTION	DATE	BY
1	1160-000 1834x1650mm	24-MAY-24	A.L.P

DRAWN	JOY	START	21-MAY-24
CHECKED	ADP		
APPD.	LEO		

TRIPLE E CANADA LTD. 1 DESIGN, CONSTRUCT & DISTRIBUTE ALL COMPONENTS AND PARTS FOR RECREATIONAL VEHICLES. MANUFACTURED IN THE PROVINCE OF ONTARIO, CANADA

TITLE	DRAINAGE
DRAWING NO.	B087148
SCALE	1:50
SHEET	1 OF 1
REV	1

LEISURE

ENTERTAINMENT

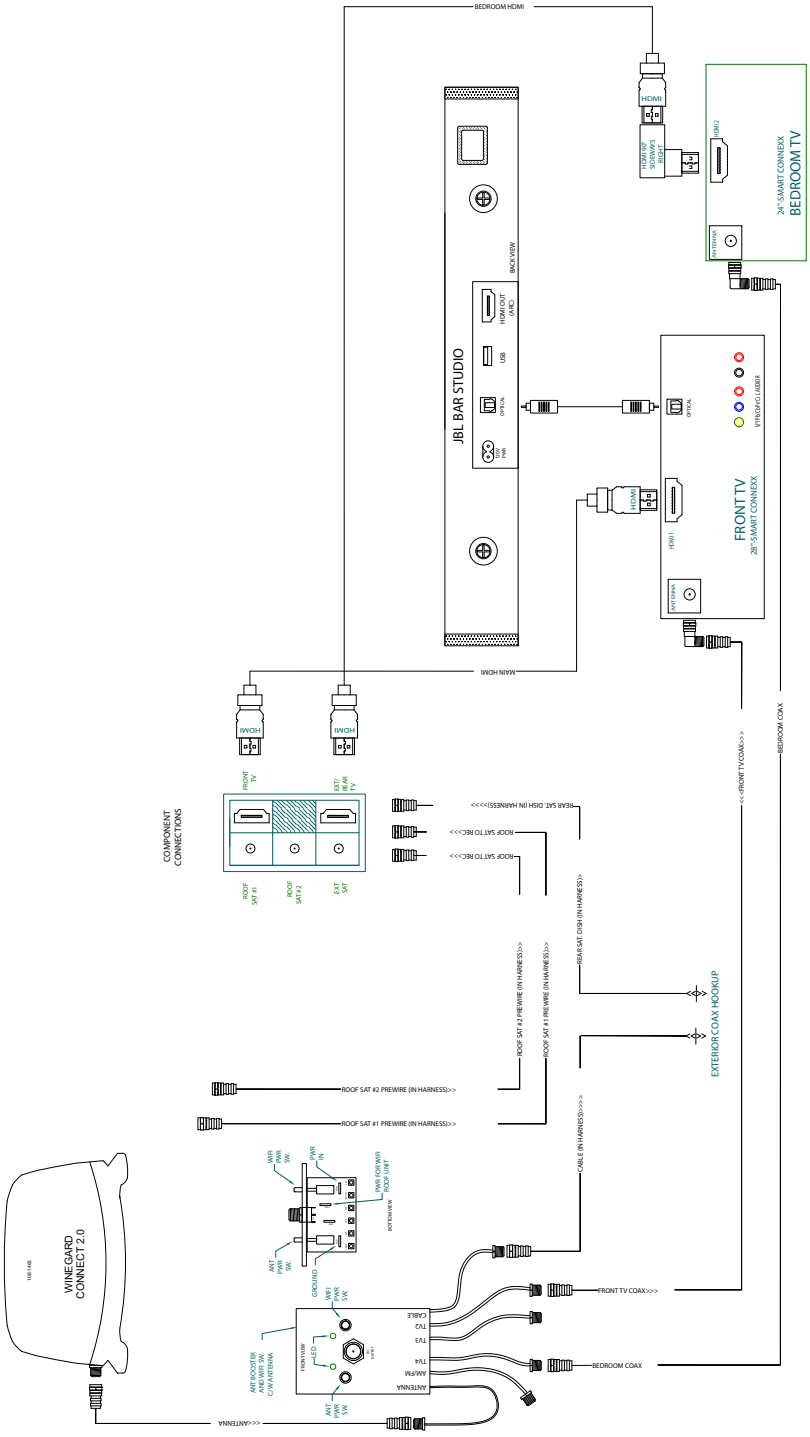

SATELLITE PRE-WIRE

If your coach did not come with the optional satellite dish, it will be pre-wired for installation at a later date if you so choose. Location of the prewire will vary by floorplan.

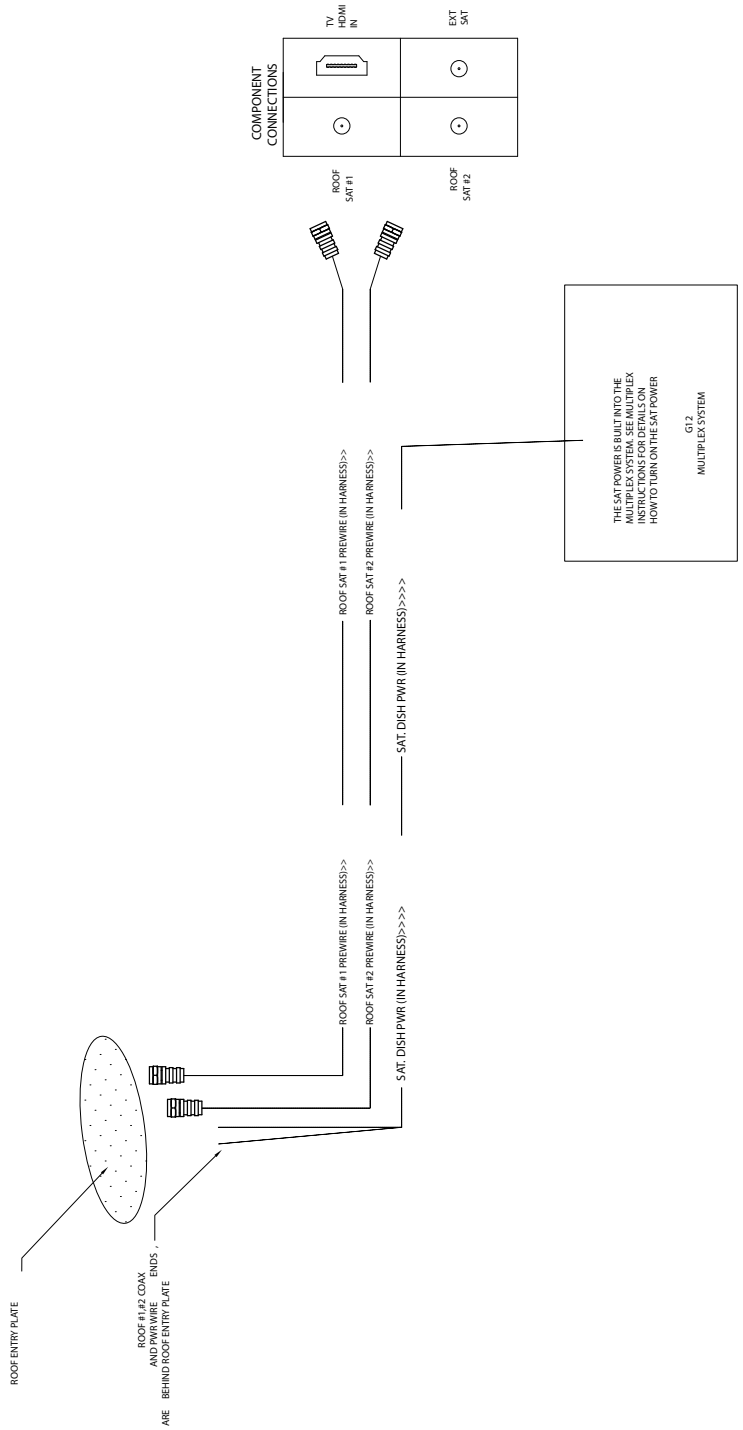

NOTES

NOTES

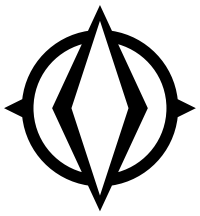

LEISURE

TRAVEL VANS

LTV Roadside Assistance

4287 Beltline Road, Box #198
Addison, TX 75001

for EMERGENCY ROADSIDE CALL
1•877•219•3831





Triple E Recreational Vehicles and Leisure Travel Vans are brands and trademarks of Triple E Canada Ltd.

301 Roblin Blvd., Box 1230 Winkler, MB Canada R6W 4C4
Telephone: 204-325-4361 Fax: 204-325-5241

US Address: P.O. Box 68 Walhalla, ND 58282

www.tripleerv.com • info@tripleerv.com • www.leisurevans.com • general@leisurevans.com

Product improvement is a continuing process at Triple E Recreational Vehicles.
We reserve the right to change specifications, operating instructions, standards and options on any products without prior notice. The information, illustrations and pictures within this document are current at the time of printing.

Copyright, Triple E Canada Ltd.
P/N 146-4609-SEP24

Printed in Canada